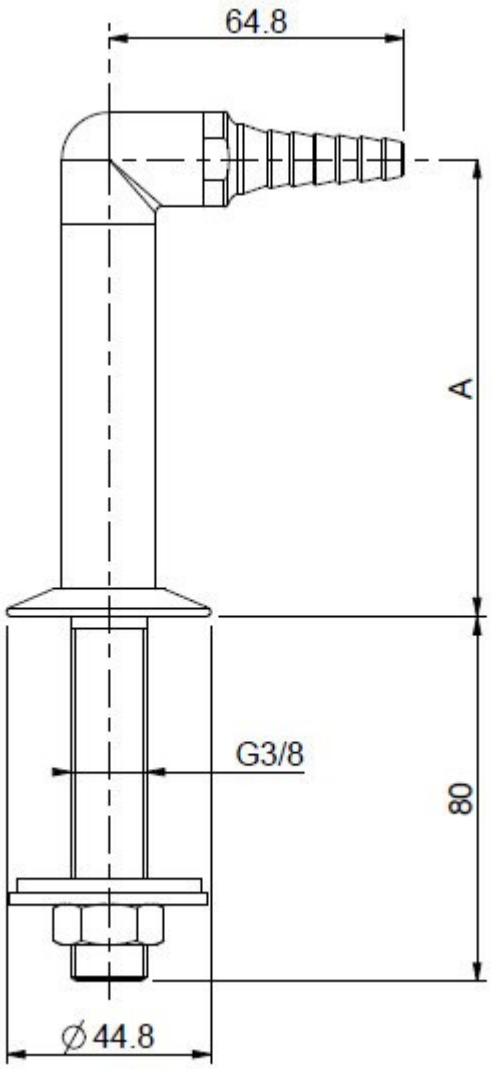

A=	100 mm.

CO3025

LABO AND CO