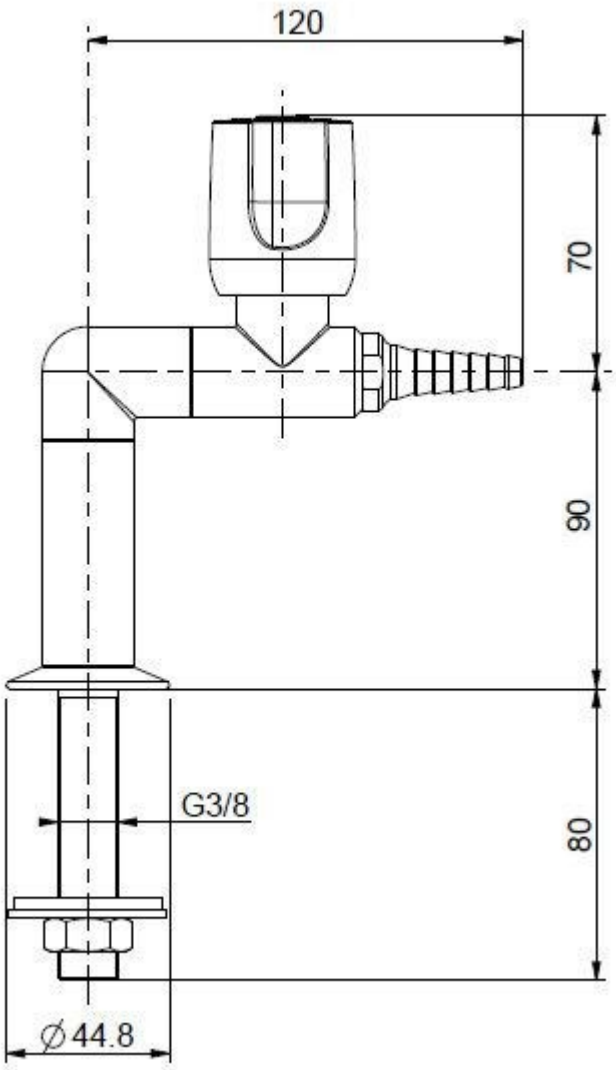

CO3010

LABO AND CO