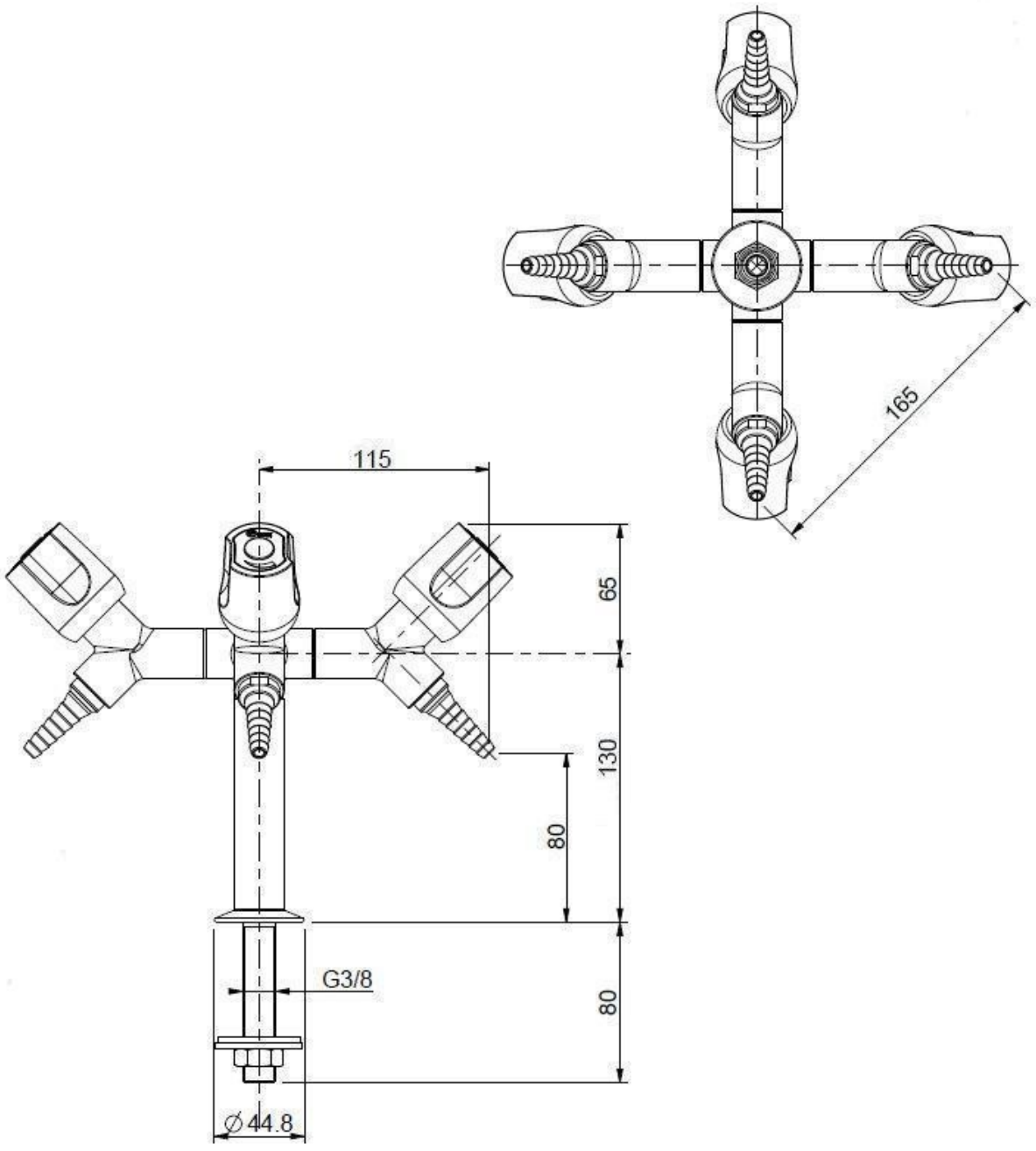

BO2021

LABO AND CO