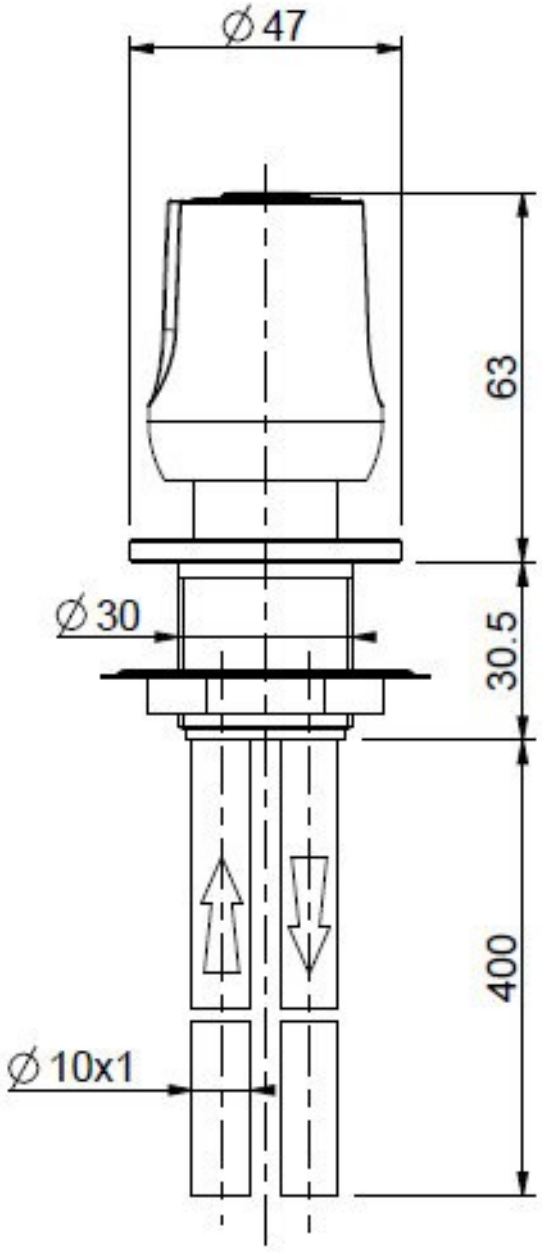

CO3040

LABO AND CO