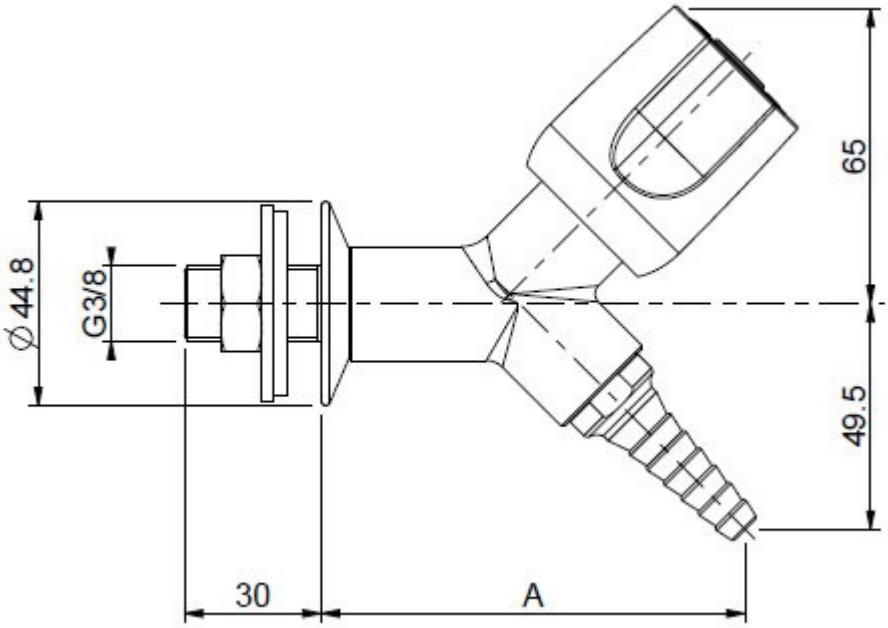

A=	80 mm.
	110 mm.

CO3002

LABO AND CO