Product specification

Incubator

IF30

The incubator I is at home everywhere in the world of research, medicine, pharmaceutics and food analytics, as well as food chemistry.



The heating of this incubator is optimally tuned for both natural convection and forced air circulation; the fan can also be switched off completely, and valuable chamber loads for research, pharmaceutics, medicine and food chemistry are warmed up very carefully.

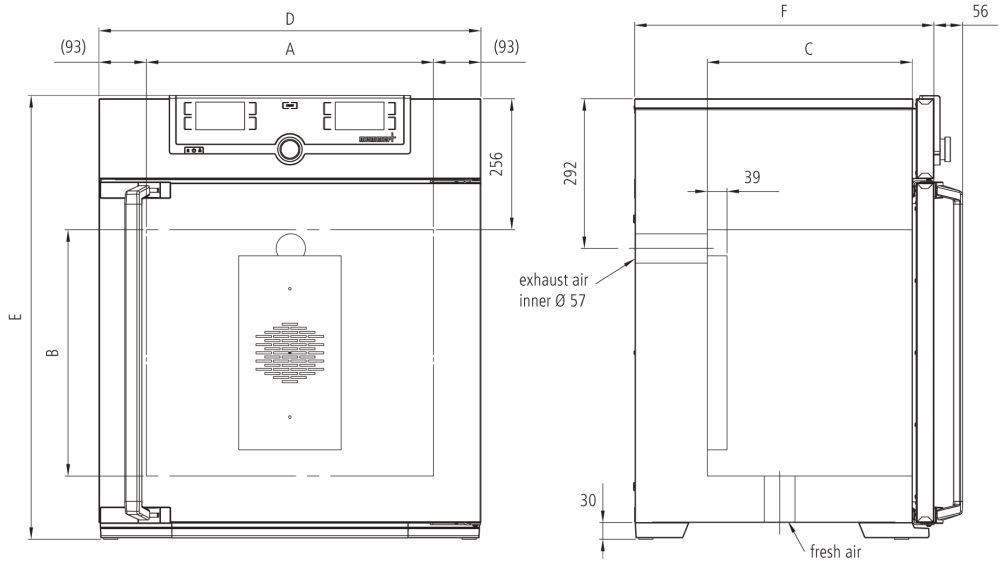

Control of standard components

ControlCOCKPIT	adaptive multifunctional digital PID-microprocessor controller with high-definition TFT-colour display
Temperature	1 Pt100 sensor DIN class A in 4-wire-circuit
Timer	Digital backwards counter with target time setting, adjustable from 1 minute to 99 days

Temperature

	min. 10°C above ambient up to +80°C
resolution of display for setpoint and actual temperature values	0.1°C

Control technology

adjustable parameters	temperature (Celsius or Fahrenheit), fan speed, air flap position, programme time, time zones, summertime/wintertime
Function SetpointWAIT	the process time does not start until the set temperature is reached
Language setting	German/English/Spanish/French
Calibration	three freely selectable temperature values

Ventilation

Fan	forced air circulation by quiet air turbine, adjustable in 10 % steps
Fresh air admixture	adjustment of pre-heated fresh air admixture by air flap control in 10 % steps
Vent	vent connection with restrictor flap

Communication

Programming	AtmoCONTROL software for reading out, managing and organising the data logger via Ethernet interface (temporary trial version can be downloaded). USB stick with AtmoCONTROL software available as accessory (on demand).
Documentation	programme stored in case of power failure

Safety

Temperature control	adjustable electronic overtemperature monitor and mechanical temperature limiter TB, protection class 1 according to DIN 12880 to switch off the heating approx. 20°C above nominal temperature
Autodiagnostic system	for fault analysis

LABO AND CO
INSTRUMENTS SCIENTIFIQUES

Standard equipment

Door	fully insulated stainless steel door with2-point locking (compression door lock)
Door	inner glass door
Internals	1 stainless steel grid
Scope of delivery	incl. works calibration certificate for +37°C
Housing	rear zinc-plated steel
Interior	easy-to-clean interior,made of stainless steel,reinforced by deep drawn ribbing with integrated and protected large-area heating on four sides

Stainless steel interior

	$w_{(A)}$ x $h_{(B)}$ x $d_{(C)}$: 400 x 320 x 250 mm
	Volume 32 l
	Max. loading of chamber: 60 kg

Textured stainless steel casing

	$w_{(D)}$ x $h_{(E)}$ x $d_{(F)}$: 585 x 704 x 434 mm

Electrical data

Voltage **Electrical load**	230 V, 50/60 Hz approx. 1600 W
Voltage **Electrical load**	115 V, 50/60 Hz approx. 800 W

Packing/shipping data

the appliances must be transported upright

Customs tariff number	8419 8998
Country of origin	Federal Republic of Germany
WEEE-Reg.-No.	DE 66812464
	Dimensions approx incl. carton B x H x T: 660 x 890 x 650 mm
	Net weight approx. 48 kg
	Gross weight carton approx. 64 kg

Standard units are safety-approved and bear the test marks

LABO AND CO
INSTRUMENTS SCIENTIFIQUES